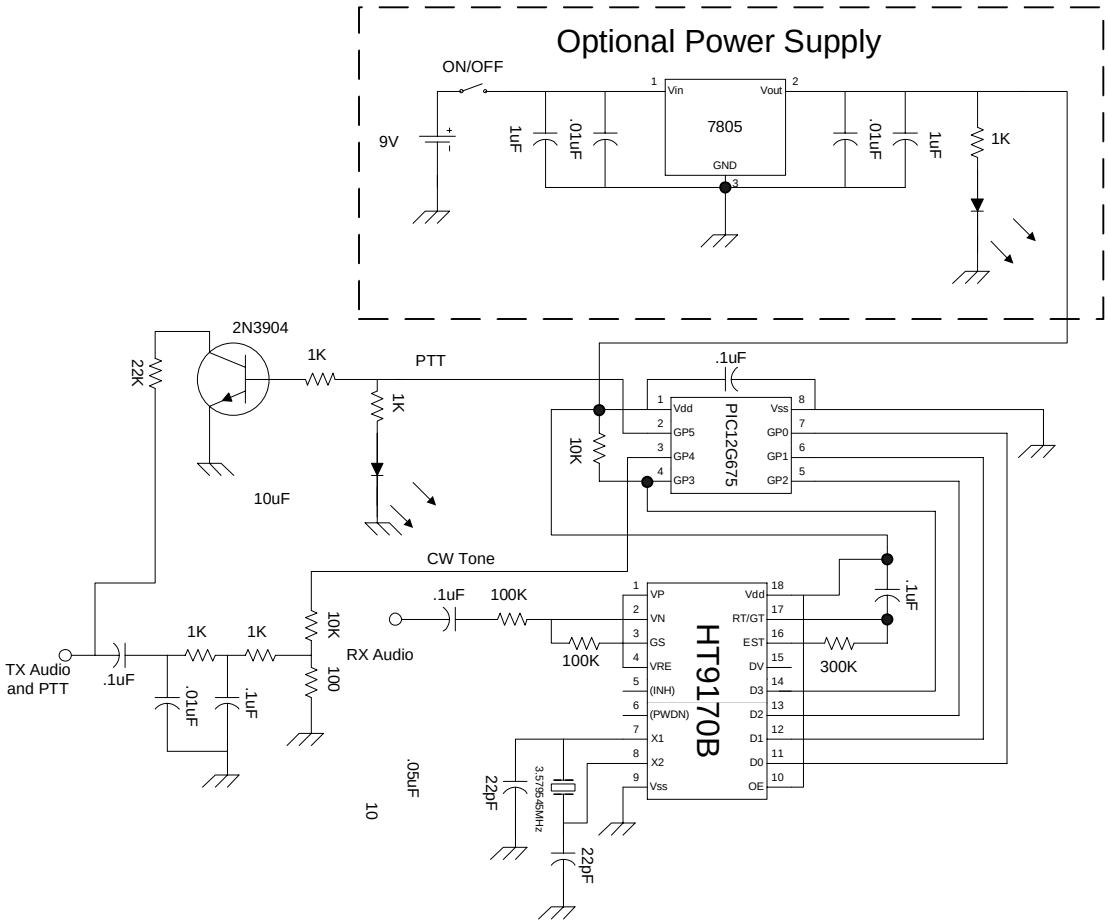Fox Controller