

Product Reviews

December 2025

Elecraft KH1 QRP Transceiver with the Edgewood Package

Pascal Villeneuve, VA2PV, va2pv@arrl.org

Product Review

Elecraft KH1 QRP Transceiver with the Edgewood Package

Reviewed by Phil Salas, AD5X
ad5x@arrl.net

The KH1 is Elecraft's latest entry into the ultra-portable, QRP CW transceiver market. It is a tiny HF rig designed for Summits on the Air (SOTA), Parks on the Air® (POTA®), backpacking, and minimalist field operations. Built for CW only, the KH1 is impressively small, rugged, and self-contained.

Overview

As you can see in the lead photo, the KH1 is about the size of a VHF/UHF handheld radio. It covers the 40-, 30-, 20-, 17-, and 15-meter ham bands, CW only for transmit, with a typical output power of up to 5 W. It has an internal loading coil for 20 and 17/15 meters that works with the screw-on telescoping whip antenna. For 40- and 30-meter operations, you do need the optional AXE1 40-meter extender coil. You can operate 30 meters without this coil (using the 20-meter antenna setting), but the SWR will be higher and power output will suffer. The KH1's superheterodyne receiver uses a 9.215 MHz IF and a varactor-tuned crystal filter. The receiver bandwidths are approximately 300 Hz, 500 Hz, and 2 kHz. There is no RF preamp, but there is a two-stage RF attenuator for strong-signal situations.

Setup in the field is truly plug and play: Attach the whip or connect an external antenna, deploy the radial (16 feet for 20 – 15 meters, 33 feet for 40/30 meters), select the operating band, enable the auto tuner, and you're on the air in under a minute. The built-in auto-keyer is smooth, and the KHPD1 plug-in paddle works very well. The KH1 may be powered by an external 8 – 15 V dc power supply or battery, or the internal 11 V dc 2600 mAh lithium battery. A 5.5 × 2.1-millimeter dc power cable with bare wire ends is supplied for connecting external power. When an external power supply with voltage greater than 11 V dc is connected, the KH1 automatically powers itself from that power supply, and the internal battery is charged if necessary. The internal KH1 charging circuit automatically stops charging upon charge completion. With an external power supply connected, the LED by the on/off switch is red when the radio is off and charging, orange when the radio is on and charging, green when the charge is complete and the radio is on, and unlit when the charge is complete and the radio is off. The published KH1 specifications, along with the ARRL Lab measurements, are shown in Table 1.

Bottom Line

With up to 5 W of output power, an impressive internal auto tuner for its size, and an internal lithium battery, the Elecraft KH1 is a self-contained transceiver in a compact package that will appeal to portable operators.



Interfaces and Controls

The KH1 has easily accessible and simplified controls and interfaces, yet provides easy access to any features you may want. On the top (see Figure 1) is the BNC antenna connector, a ground connector, the internal inductor switch used with the whip antenna, and the whip antenna interface. In the center "**X**" position, the transmitter is connected to the BNC connector.

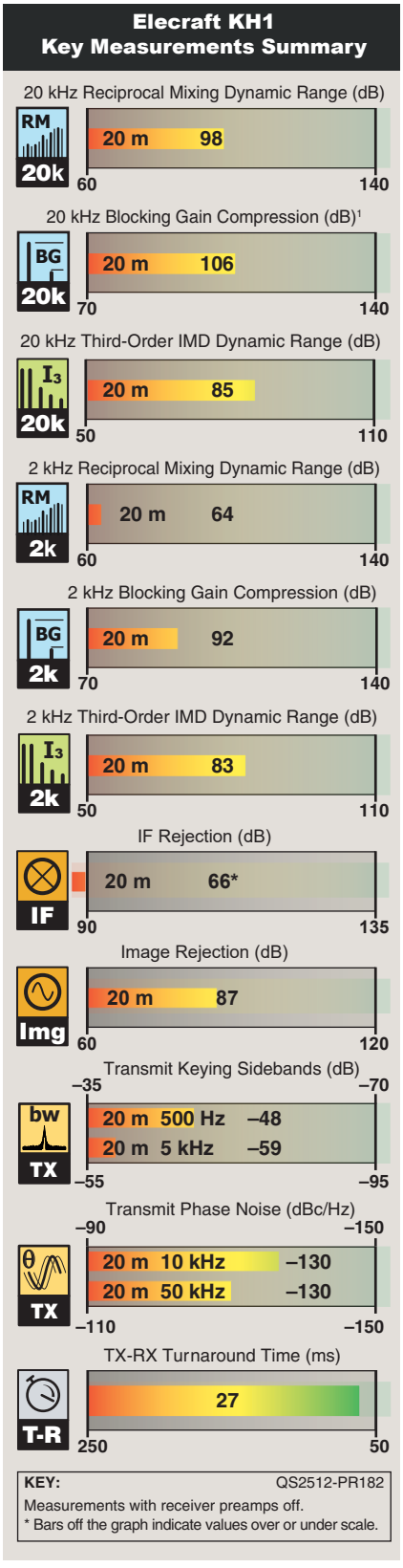

Table 1 — Elecraft KH1 HF Transceiver S/N 724, Main CPU Firmware 1.25

Manufacturer's Specifications	Measured in the ARRL Lab
Frequency coverage: Receive, 7.0 – 7.5 MHz, 10.0 – 10.5 MHz, 14.0 – 14.5 MHz, 18.0 – 18.5 MHz, 21.0 – 21.5 MHz, 6.7 – 22.0 MHz (general-coverage band); transmit, 40/30/20/17/15-meter amateur bands.	Receive and transmit as specified.
Power requirements: 8 – 15 V dc: Receive, 40 – 80 mA (typical); transmit, 0.5 – 1.0 A (typical); charger adds ~250 mA when charging battery.	At 13.8 V dc: Receive, as specified except 90 mA on 40 and 30 meters; transmit, as specified; battery charger adds 218 mA.
Modes of operation: CW and CW/SSB cross mode (CW TX, SSB RX).	As specified.

Receiver

Receiver Dynamic Testing

All measurements taken at 500 Hz bandwidth, unless otherwise specified.

SSB/CW sensitivity (MDS): –133 dBm (typical) at 14.0 MHz, 500 Hz bandwidth.

7 MHz	–131/0.07	dBm/µV
14 MHz	–136/0.04	dBm/µV
21 MHz	–131/0.07	dBm/µV

Blocking gain compression dynamic range: Not specified.

Offset	*20 kHz*	*5 kHz*	*2 kHz*	
7 MHz	108	109	82[1]	dB
14 MHz	106	105	92[1]	dB
21 MHz	103	103	86[1]	dB

Reciprocal mixing dynamic range: Not specified.

Offset	*20 kHz*	*5 kHz*	*2 kHz*	
14 MHz	98	98	64[1]	dB

Two-tone intermodulation distortion (IMD) testing:

Band	*Spacing*	*Measured IMD Level*	*Measured Input Level*	*IMD DR*
7 MHz	20 kHz	–131 dBm	–51 dBm	80 dB
14 MHz	20 kHz	–136 dBm	–51 dBm	85 dB
14 MHz	5 kHz	–136 dBm	–51 dBm	85 dB
14 MHz	2 kHz	–136 dBm	–53 dBm	83 dB
21 MHz	20 kHz	–131 dBm	–50 dBm	81 dB

On the bottom (see Figure 2), you will find the AF/spot control, the key/data 3.5-millimeter port, and the VFO control.

The 2.1 × 5.5-millimeter dc port and the on/off slide switch are found on the left side, and a headphone or externally amplified speaker jack is found on the right side.

The front panel shown in the lead photo has four multi-function keys. Tapping a button enables the top (white) function, and pressing and holding a button for ½ second enables the bottom (yellow) function.

When tapped, buttons **1** and **2** change the CW keying speed down and up. The display momentarily indicates the speed. When tapped, button **3** causes the internal automatic antenna tuner (ATU) to tune. Tapping button **4** provides access to up to six stored CW messages.

Holding button **1** for about ½ second gives you access to the three filter bandwidths that you select by tapping buttons **1**, **2**, or **3**. In this mode, holding buttons **1**, **2**, or **3** provides access to 0, 10, or 30 dB receiver attenuation. Holding button **4** turns on RIT.

Second-order intercept point: Not specified.	14 MHz, +41 dB.
S-meter sensitivity: Not specified.	S9 indication: 7 MHz –82/17.8 dBm/µV 14 MHz –75/39.8 dBm/µV 21 MHz –77/31.6 dBm/µV
Receive bandwidth: Three crystal filter bandwidths (~0.3, 0.5, 2.0 kHz), filter center pitch tracks sidetone pitch.	Range at –6 dB points (bandwidth), sidetone at default (500 Hz), CW mode: F1 (0.3 kHz BW): –141 to +135 Hz (276 Hz) F2 (0.5 kHz BW): –161 to +280 Hz (441 Hz) F3 (2.0 kHz BW): –151 to +245 Hz (396 Hz)[2]
Receive processing delay time: Not specified.	3 ms.
Audio output: ~0.5 W peak into internal speaker.	Internal speaker not tested. Headphone output: 1.6 V_{rms} (8.5 mW into 300 Ω) at 1% THD.

Transmitter — **Transmitter Dynamic Testing**

Power output: ~5 W max.	> 5 W on all bands; 6.3 W max output (40 meters); can be reduced to 2 W.
Spurious signal and harmonic suppression: > 50 dB below carrier typical at 5 W.	Typically, > 60 dB; worst case, 21 MHz, 48 dB; complies with FCC emissions standards.
CW keyer speed range: 8 – 50 WPM.	8 to 47 WPM; iambic mode A&B.
CW keying characteristics: Not specified.	See Figures A and B.
Transmit-receive turnaround time: Not specified.	Key up to 50% audio output, S-9 signal: 27 ms.
Transmit phase noise: Not specified.	See Figure C.

Size (height, width, depth, including protrusions): 1.3 × 2.75 × 5.75 inches.

Weight: 0.7 pound.

[1] Test stopped at this level due to spurious signal in audio.
[2] See Lab Notes.

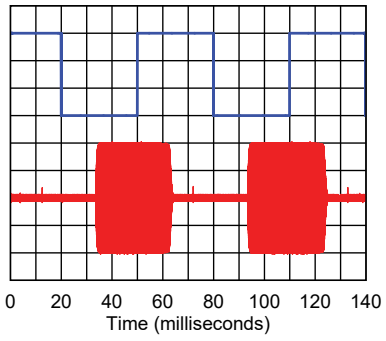

Figure A — CW keying waveform for the Elecraft KH1 showing the first two dits using external keying. Equivalent keying speed is 40 WPM. The upper trace is the key closure; the lower trace is the RF envelope. Horizontal divisions are 10 ms. The transceiver was being operated at 5 W output on the 14 MHz band. The first-dit rise time is 0.7 ms; the fall time is 1.0 ms. The second-dit rise time is 0.7 ms; the fall time is 1.0 ms. The first-dit on delay is 13.8 ms; the off delay is 13.1 ms. The second-dit on delay is 13.7 ms; the off delay is 14.0 ms.

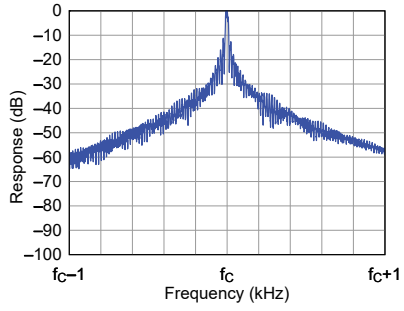

Figure B — The spectral display of the Elecraft KH1 transmitter during keying sideband testing. Equivalent keying speed is 40 WPM using external keying. Spectrum analyzer resolution bandwidth is 3 Hz, and the sweep time is 1.35 seconds. The plot is an average of 10 sweeps. The transmitter was being operated at 5 W PEP output on the 14 MHz band, and this plot shows the transmitter output ± 1 kHz from the carrier. The reference level is 0 dBc, and the vertical scale is in dB.

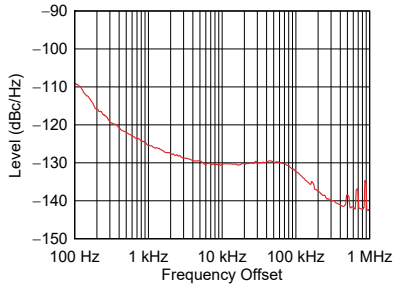

Figure C — The spectral display of the Elecraft KH1 transmitter output during phase noise testing. Power output is 5 W on the 14 MHz band. The carrier, off the left edge of the plot, is not shown. This plot shows phase noise 100 Hz to 1 MHz from the carrier. The reference level is –90 dBc/Hz, and the vertical scale is 10 dB per division.

Holding button **2** for about ½ second provides eight functions. In this mode, tapping buttons **1**, **2**, or **3** gives you access to programmable functions, such as quickly changing the standard display to show voltage, current, and temperature, or quickly selecting the **PANADAPTER** mode. In this mode, holding button **1** puts the transmitter into **TUNE** mode. Holding button **2** lets you select between low and high power (~2 W and ~5 W, settable). Holding button **3** puts the radio into a test mode, whereby there is a sidetone output without RF output. Finally, holding button **4** turns on XIT.

Holding button **3** provides for easily changing bands by tapping the **1** (down) or **2** (up) button. In this mode, tapping button **3** exchanges the present VFO frequency with the scratchpad memory. Holding button **3** copies the VFO to memory.

Finally, holding button **4** takes you to the menu, which provides access to advanced features. You will initially want to adjust the date and time, and maybe your high and low power levels (default 5 W / 2 W). Some of the other features are alignment levels, which you may want to stay away from. Many of the features are locked, so you won't accidentally change them. Probably the most used feature will be the **PANADAPTER** mode.



Figure 1 — The Elecraft KH1 top view, with BNC antenna connector, ground, inductor switch, and whip antenna connector.



Figure 2 — The Elecraft KH1 bottom view, with volume, key/data port, and VFO control.

Firmware Updates

Elecraft has one of the best and easiest firmware update features. First, you need to go into the KH1 menu and change the key jack from **PADDLE** to **RS232**. Then, download the KH1 app from the Elecraft support website, connect the supplied KXUSB cable to the **KEY/DATA** jack, and open the KH1 app. Now you can easily check for the latest firmware and install it if you have an older version. This process is trivial and will probably take you less than a minute. I did find one bug, whereby when operating cross mode (CW TX/LSB RX or CW TX/USB RX) with a straight key, the KH1 can lock into continuous transmit as soon as you key down. Elecraft said they would have a fix soon, so I'm sure it will be available by the time this review is published.

Additional Testing

The KH1 auto tuner is a pretty minimalistic tuner, and I wanted to see what values of resistive loads it could match. I also wanted to get a feel for how much loss there might be in the auto tuner. I used the SWR/loss setup described in my March 2021 *QEX* article, "Antenna Tuner Loss Measurements." The test results are given in Table 2. Except for some extreme cases, the auto tuner was able to achieve a very low SWR. The radio output at a 1:1 SWR is the reference power, as the auto tuner is bypassed in this case. The RF output after the auto tuner was calculated was based on the known loss of the SWR test box. So, the RF power shown in Table 2 is the power out of the auto tuner when the match is realized.

Comparing the calculated auto-tuner power outputs to the 50 Ω matched outputs, you can see that in most cases the auto-tuner loss is less than 1 dB. This is quite good, especially considering the small size of the auto tuner.

Of course, this is testing into a resistive load box. So next I tested into my 43-foot vertical. That antenna is fed through about 60 feet of low-loss ½-inch HELIAX®. I achieved the results as shown in Table 3.

Next, because the KH1 is specified to operate from 8 to 15 V dc, I wanted to see what the maximum power output was at two different voltage levels. I chose 11 V dc, as this is the nominal internal battery voltage, and 13.8 V dc, as this is a typical station power supply. The results are shown in Table 4.

As you can see in Table 4, the power output increases quite a bit as you increase voltage. Therefore, at power supply/battery volt-

Table 2 — Elecraft KH1 ATU Resistive Load and Loss Testing

Tested by the reviewer, Phil Salas, AD5X

SWR/Impedance		40 M	30 M	20 M	17 M	15 M
8:1/6.25 Ω	PWR/loss	3.3 W/1.9 dB	4.8 W/.43 dB	4.6 W/.27 dB	4.6 W/0.1 dB	4.9 W/.66 dB
	Tuned SWR	3.6:1	1.8:1	1.5:1	1.5:1	1.6:1
4:1/12.5 Ω	PWR/loss	4.5 W/.54 dB	5.0 W/.25 dB	4.0 W/.88 dB	4.4 W/.29 dB	4.9 W/.66 dB
	Tuned SWR	1.9:1	1.1:1	1.1:1	1:1	1.2:1
3:1/16.7 Ω	PWR/loss	5.0 W/.08 dB	4.7 W/.52 dB	4.8 W/0.1 dB	4.6 W/0.1 dB	5.3 W/.32 dB
	Tuned SWR	1.3:1	1.1:1	1.1:1	1:1	1:1
2:1/25 Ω	PWR/loss	5.1 W/0 dB	4.2 W/1 dB	4.5 W/.37 dB	4.5 W/.19 dB	5.1 W/.48 dB
	Tuned SWR	1:1	1.1:1	1:1	1:1	1:1
1:1/50 Ω	PWR/loss	5.1 W/0 dB	5.3 W/0 dB	4.9 W/0 dB	4.7 W/0 dB	5.7 W/0 dB
	Tuned SWR	1:1	1:1	1:1	1:1	1:1
2:1/100 Ω	PWR/loss	4.4 W/.64 dB	4.5 W/.7 dB	4.3 W/.67 dB	4.4 W/.39 dB	5.5 W/.16 dB
	Tuned SWR	1:1	1.1:1	1:1	1:1	1:1
3:1/150 Ω	PWR/loss	4.2 W/.84 dB	4.5 W/.7 dB	4.3 W/.67 dB	4.5 W/.19 dB	4.8 W/.75 dB
	Tuned SWR	1:1	1.1:1	1:1	1:1	1.1:1
4:1/200 Ω	PWR/loss	4.0 W/1.1 dB	4.4 W/.81 dB	4.4 W/.47 dB	4.0 W/0.7 dB	4.7 W/.85 dB
	Tuned SWR	1:1	1.2:1	1.1:1	1.3:1	1:1
8:1/400 Ω	PWR/loss	2.9 W/2.45 dB	4.6 W/.62 dB	4.4 W/.47 dB	4.1 W/.59 dB	4.2 W/1.3 dB
	Tuned SWR	1.2:1	1:1	1:1	1.3:1	1:1

Table 3 — KH1 Matched SWR with 43-Foot Vertical
Tested by the reviewer, Phil Salas, AD5X

Band	40 M	30 M	20 M	17 M	15 M
KH1 tuned SWR	1.2:1	1.4:1	1.1:1	1:1	1:1

Table 4 — Power Output vs Power Supply Voltage
Tested by the reviewer, Phil Salas, AD5X

Band	11 V dc	13.8 V dc
40 M	5.1 W	6.0 W
30 M	5.2 W	6.9 W
20 M	4.9 W	5.7 W
17 M	4.7 W	6.2 W
15 M	5.7 W	7.2 W

ages above 12 V dc, I'd probably want to run the radio at the low power setting.

Operating the KH1

Then it was time to have fun. I operated CW on all five bands (40 – 15 meters) using my 43-foot vertical. As expected with CW, I had no problem making contacts on the five bands. The CW reports were all excellent, with no reports of key clicks or chirps. And the KHPD1 plug-in keyer paddle worked perfectly. Operating with the supplied whip antenna was much different, though. I did spend some time walking along a hiking trail near my home using the supplied whip antenna and dragging the 13-foot counterpoise behind me. I could hear some stations, but they were very weak. Trying to make contacts this way would be difficult anyway, as holding the KH1 and trying to simultaneously operate the paddle is not something I could easily do.

I did better operating from a table in my backyard. I did not have the KHRA1 right-angle adapter, but I did have the AX3 tripod/whip antenna system for a separate review. The AX3 uses the same whip and takes the same AXE1 40-meter extender, as does the KH1. I did deploy the supplied radials (33 feet for 40/30 meters, and 13 feet for 20 – 15 meters). I could hear signals on the different bands, but again, they were all pretty weak. I made a few marginal contacts on 20 and 17 meters. I guess that's to be expected with a compromise antenna. Results might be better if I was situated on a high hill, instead of the flatlands here in the Dallas area. I did find the internal speaker to be harsh and often crackly. The audio was perfect when using headphones. Also, the KHPD1 keyer paddle is so close to the tuning knob that I often hit the paddle while tuning. This is not a problem, just something to be aware of.

Lab Notes

The Elecraft KH1 radio is a very compact, full-featured CW transceiver with AM and SSB receive capability, including an internal antenna tuner. With so much functionality packed into a small package, some design compromises will likely need to be made. In the case of the KH1, the only notable performance trade-off seemed to be around spurious signals caused by strong off-channel RF. The radio exhibited strong audible spurious responses (i.e., "birdies") during the receiver dynamic range testing at the 2 kHz and 5 kHz spacings on all bands. These responses affected our ability to accurately measure both reciprocal mixing and blocking gain compression dynamic ranges, so our published values in Table 1 are lower than expected and may not accurately reflect the true performance of the radio had the spurious signals not been present. The test method used in the Lab for the third-order IMD dynamic range allows us to "work around" spurious responses, so these test results are more in line with what we would expect for a radio in this class, though we could still hear the spurious tones during testing. Translating these numbers to on-the-air performance, the operator may experience audible effects from nearby strong signals in quiet band conditions.

The test results for the widest receive filter ("FL3") would indicate that the filter is narrower than stated in the product manual; this is a result of the shape of the filter response combined with our test method. The filter has a significant peak within the passband that exhibits a narrow –6 dB bandwidth response, and this –6 dB bandwidth is what we typically publish. That does not tell the whole story; when looking at the filter response more broadly (using a wideband RF noise source), the filter shape becomes more obvious and more closely resembles the manufacturer's intended filter width, albeit with significant amplitude variation in the passband most likely due to the analog nature of the KH1 filtering. The narrower filters ("FL1" and "FL2") typically used for CW operation don't exhibit this characteristic, so their measured values are very much in line with the product specification.

Last, the manufacturer states that the power output is around 500 mW into the internal speaker, which is surprising given the relatively low output volume. We are unable to verify this claim due to the construction of the unit; however, we measured about 8 mW at the headphone output using a 300 Ω headphone impedance, which should be plenty loud for most operators.

— Rick Ciervo, W1CIE, Senior Laboratory Engineer



Figure 3 — The Elecraft KH1 panadapter 17-meter display.

Additional Features

The KH1 has many of the features you expect to see in transceivers today. These include a receiver attenuator, RIT/XIT, multiple filter bandwidths, and CW memories. And while kind of crude, I did like the panadapter for helping to find signals. Figure 3 shows the panadapter display centered at 18.072 MHz and sweeping ± 5 kHz.

Conclusion and Final Thoughts

Operating the KH1 is not exactly intuitive, but once you've gone through the manual a time or two, you will find the KH1 easy to operate. The internal auto tuner works very well, as does the KHPD1 keyer paddle. I would like to see Elecraft come up with a better internal speaker. And while operating with the attached whip antenna may be convenient, don't expect great things from this compromise antenna.

Manufacturer: Elecraft, 125 Westridge Dr., Watsonville, CA 95076, **www.elecraft.com**. Price: KH1 only, $650; Edgewood package, $1,309.65. Other options are available on the manufacturer's website. The Edgewood Package includes the antenna tuner, built-in whip, keyer paddle, logbook tray with mini-ballpoint pen, internal battery charger, and custom zippered carrying case.

VA6AM Engineering Low-Power Triplexer and Band-Pass Filters for 20/15/10 Meters

Reviewed by Mark Wilson, K1RO
k1ro@arrl.net

Propagation on the upper HF bands has been terrific for the past few years, with all of the bands open during the day and well into the evening hours. My station has two transceivers that I've been using for single operator, two radio (SO2R) contest operating, as well as for hunting needed stations for various award programs and monitoring band openings at other times. During contests, the SO2R setup allows me to CQ and run stations with one radio while hunting for multipliers and contacts on a different band with the other radio. It's an effective way to increase scores, but I'm limited by my antennas — a single, small multiband Yagi and some inverted-V dipoles. When 10, 15, and 20 meters are all open at the same time, I could really use another beam for the second radio.

Rather than install another antenna support and beam, I decided to add a triplexer and band-pass filters for



Bottom Line

The VA6AM Engineering triplexer and band-pass filters allow use of a single multiband antenna on two or even three bands simultaneously. The excellent out-of-band rejection protects receivers from damage while minimizing inter-station interference.



Figure 4 — VA6AM Engineering 200 W triplexer for 14, 21, and 28 MHz.

20/15/10 meters inside my station to allow me to use my multiband antenna on several bands at the same time (see the sidebar, "Multiplexers"). This approach to sharing a single multiband antenna has been around for a while and is ideal for SO2R contesting, multioperator contest stations, Field Day setups, and club stations.

The triplexer alone does not provide enough isolation among the three bands, so additional band-pass filters are needed to prevent receiver damage and minimize inter-station interference. This review covers the VA6AM Engineering triplexer rated for 200 W maximum per band (see Figure 4) and band-pass filters rated for 150 W per band (see Figure 5). Note that you can use other band-pass filters with the triplexer if they provide sufficient rejection of the other bands. The VA6AM products make a nice system with excellent performance.

The hardware reviewed here is made by Pavel Perchine, VA6AM, and distributed by DX Engineering. According to Pavel's excellent website (**www.va6am.com**), he started developing triplexers and band-pass filters in 2013 for his own station. He published the designs with detailed construction information and offered printed circuit boards. Over time he expanded to offering kits and assembled multiplexers and band-pass filters for different band combinations and power levels.

Testing

QST Technical Editor Phil Salas, AD5X, tested the 20/15/10-meter triplexer and band-pass filters using an Array Solutions VNAuhf vector network analyzer. The calibration included the necessary N-to-UHF adapters, and a precision microwave 3 dB attenuator inserted in the thru-calibration procedure maximized the return



Figure 5 — The VA6AM Engineering 14, 21, and 28 MHz band-pass filters are rated for 150 W.

loss of the through cable, connectors, adapters, and VNA input impedance.

Test results for the triplexer alone are shown in Table 5, and band-pass filter test results are shown in Table 6. Table 7 shows measurements of the triplexer and filters together. All tables show the worst-case insertion loss, rejection, and return loss measurements in the tabulated bands. Swept-frequency response plots for the triplexer and filters are available online at the *QST* in Depth web page (**www.arrl.org/qst-in-depth**).

The triplexer was tested with 50 Ω terminations on the unused input ports, as recommended by VA6AM. Some antenna switches do not provide 50 Ω loads for unused ports, so the tables show a second set of measurements without 50 Ω terminations on the unused input ports.

As shown in Table 5, each triplexer port passes the band of interest with minimal insertion loss and attenuates the other two bands. For example, with a 10-meter signal applied to the 28 MHz input, worst-case rejection is 38 dB in the 21 MHz band and 45 dB in the 14 MHz band. For the 21 MHz band input, rejection is at least 28 dB in the 14 MHz band and 31 dB in the 28 MHz band.

Test results for the band-pass filters are shown in Table 6. Again, the filters exhibit minimal in-band loss. Rejection of the other two bands is at least 41 dB and in some cases much higher.

Table 7 shows test results for the triplexer and filters connected together. Insertion loss for the triplexer/filter combination is 0.45 dB or less, and return loss is 15 dB or better (SWR of 1.4:1 or less) across all three bands.

Attenuation on the adjacent bands is at least 72 dB and typically 80 to 90 dB depending on the frequency combination. With 100 W (+50 dBm) transmitters, at most 10 µW (–20 dBm) reaches the receiver input, and typically it's 1 µW (–30 dBm). For comparison, the ARRL Lab tests receivers with signal levels up to 10 mW (+10 dBm), so the triplexer with filter combination offers a considerable safety margin.

Table 5 — VA6AM Engineering 14/21/28 MHz Low-Power Triplexer

Manufacturer's Specifications	Measured by Phil Salas, AD5X
Insertion loss: < 0.15 dB.	14 MHz, 0.12 dB; 21 MHz, 0.14 dB; 28 MHz, 0.1 dB with unused ports terminated in 50 Ω.
Adjacent band attenuation: 30 – 50 dB with unused ports terminated in 50 Ω.	See measurements below, which agree closely with VA6AM specification sheet.
Return loss: > 26 dB.	Worst case within each band, unused ports terminated in 50 Ω: 14 MHz, 19 dB; 21 MHz, 21 dB; 28 MHz, 23 dB.
Power handling: 200 W ICAS*, max. 2.5:1 SWR.	Tested at 100 W.

Size (height, width, depth): 3.5 × 8 × 6 inches.
Weight: 1.7 pounds.
*ICAS is Intermittent Commercial and Amateur Service.

Triplexer Alone with 50 Ω Terminations on Unused Ports

Input Band	*Adjacent Band Attenuation*		
(MHz)	*28 MHz*	*21 MHz*	*14 MHz*
28	—	38 dB	45 dB
21	31 dB	—	28 dB
14	53 dB	41 dB	—

Triplexer Alone with No Terminations on Unused Ports

Input Band	*Adjacent Band Attenuation*		
(MHz)	*28 MHz*	*21 MHz*	*14 MHz*
28	—	30 dB	40 dB
21	30 dB	—	27 dB
14	50 dB	36 dB	—

On the Air

The triplexer and filters are housed in clearly labeled aluminum cabinets. Connections are all SO-239 jacks. On one side, the triplexer has three inputs, one for each band, and a single connector on the opposite side for the antenna feed line. Filters have connectors at each end of the case.

I was able to connect the 10- and 20-meter filters to the triplexer using double-male UHF adapters. There wasn't enough room in the center for the 15-meter filter, so I used a short cable between the filter and triplexer input. Then I connected my multiband antenna feed line to the triplexer and ran short cables from each filter to my antenna switch. I also added VA6AM band-pass filters for 40 and 80 meters to minimize inter-station interference when using those bands. Figure 6 shows my setup.

Using the triplexer and filters gave me the same capability as having separate antennas for each band on the same mast. For example, as the bands opened in the morning, I could call CQ on 15 meters and tune around and work stations on 10 or 20 meters. As signals on 10 meters improved and stations became easier to work, I could decide the best time to switch to CQing on 10 meters and hunting on the other bands. During the New England QSO Party in May, I spent quite a bit of time CQing on 20 meters. Conditions were not great, and it was nice being able to call stations that popped up on 15 meters or to try interleaving some CQs there without losing my place on 20 meters.

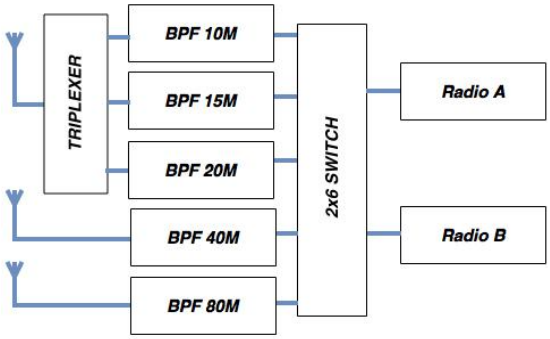

Figure 6 — My station configuration is similar to one shown on the VA6AM website. I'm using two Kenwood TS-590S transceivers, an Array Solutions 2×6 antenna switch (two radios, six antennas), the VA6AM Engineering triplexer, and VA6AM band-pass filters for 80 – 10 meters. The antenna switch also has room for a 160-meter antenna. [Image courtesy of **www.va6am.com**]

Using both radios with the triplexer/filter combination, I didn't experience any inter-station interference except

Table 6 — VA6AM Low-Power Band-Pass Filters

Manufacturer's Specifications	Measured by Phil Salas, AD5X
Insertion loss: 0.6 dB max.	14 MHz, < 0.35 dB; 21 MHz, < 0.39 dB; 28 MHz, < 0.42 dB.
Return loss: > 26 dB.	Worst case within each band: 14 MHz, 27 dB; 21 MHz, 29 dB; 28 MHz, 27 dB.
Adjacent band attenuation: Varies band to band.	See measurements below, which agree closely with VA6AM specification sheets.
Power handling: 150 W ICAS*; max. 2:1 SWR.	Tested at 100 W.

Size (height, width, depth): 3 × 7 × 3 inches.
Weight: < 1 pound.
*ICAS is Intermittent Commercial and Amateur Service

Band	*3 dB Bandwidth*	*Adjacent Band Attenuation*			
(MHz)	*(MHz)*	*28 MHz*	*21 MHz*	*14 MHz*	*7 MHz*
28	27 – 32	—	> 41 dB	> 76 dB	> 88 dB
21	18 – 23	> 55 dB	—	> 47 dB	> 33 dB
14	12.1 – 16.1	> 55 dB	> 62 dB	—	> 64 dB

when listening on or near harmonic frequencies. For example, when listening on 28.050 MHz and transmitting with my second radio on 14.025 MHz, I heard the second harmonic at about S-9 +10 dB. Tuning away from the harmonic signal, I could hear low-level noise for about 5 kHz on either side of the signal but could still copy most stations through the noise.

My antennas are in fairly close proximity, and without filters I experience some inter-station interference from 40-meter harmonics while listening on 20 and 15 meters. With VA6AM band-pass filters for each band, the second harmonic on 20 meters was reduced to about S-9 +20 dB with S-3 noise for about 5 kHz on each side of the signal. The third harmonic on 15 meters was about 10 dB stronger than that.

Although I used the triplexer and filters as a single operator with two radios, a setup like this would be ideal for Field Day to reduce the setup complexity. The team could operate on 10, 15, and 20 meters simultaneously using a single tribander or hexbeam or even a multiband vertical or dipole provided that the antenna SWR on each band is below the specified maximum. VA6AM's website recommends a maximum of 100 W continuous with up to 1.5:1 SWR, and the DX Engineering website indicates 50 W maximum with FT8 or other digital modes at the maximum 2.5:1 SWR.

Table 7 — VA6AM Engineering Triplexer and Band-Pass Filter Combination

Triplexer and Filters with 50 Ω Terminations on Unused Ports

Insertion loss: 28 MHz, 0.45 dB; 21 MHz, 0.45 dB; 14 MHz, 0.39 dB.
Return loss: 28 MHz, 15 dB; 21 MHz, 15 dB; 14 MHz, 25 dB.

Input Band	*Adjacent Band Attenuation*			
(MHz)	*28 MHz*	*21 MHz*	*14 MHz*	*7 MHz*
28	—	82 dB	83 dB	90 dB
21	87 dB	—	72 dB	53 dB
14	89 dB	89 dB	—	69 dB

Triplexer and Filters with No Terminations on Unused Ports

Insertion loss: 28 MHz, 0.5 dB; 21 MHz, 0.44 dB; 14 MHz, 0.4 dB.
Return loss: 28 MHz, 15 dB; 21 MHz, 15 dB; 14 MHz, 19 dB.

Input Band	*Adjacent Band Attenuation*			
(MHz)	*28 MHz*	*21 MHz*	*14 MHz*	*7 MHz*
28	—	70 dB	88 dB	85 dB
21	80 dB	—	60 dB	53 dB
14	84 dB	85 dB	—	59 dB

In Summary

I really enjoyed using the VA6AM Engineering triplexer and filters to make the most of my current station and antennas. Now that I have improved the hardware, I'll need to work on my operating techniques to catch up with the added capability.

Manufacturer: VA6AM Engineering, Edmonton, AB, **https://va6am.com**. Distributed in the US by DX Engineering. Price: LP-TR-101520 triplexer, $380.99; LP-BPF series band-pass filters, $221.99 each.

Multiplexers

A multiplexer uses filters and traps to separate and isolate signals to allow simultaneous operation on multiple bands with a single feed line and multiband antenna. A multiplexer can be built for any combination of two or more bands. The unit reviewed here is called a *triplexer* because it covers three bands — 20, 15, and 10 meters. The 10-meter signal path has traps for 15 and 20 meters, while the 15-meter signal path has traps for 20 and 10 meters, and the 20-meter signal path has traps for 10 and 15 meters. DX Engineering also offers VA6AM Engineering multiplexers for other band combinations such as 160/80/40 meters, 80/40 meters, and 80/40/20 meters. These are all rated at 200 W.

See *QST* in Depth for More!

Visit www.arrl.org/qst-in-depth for the following supplementary materials and updates:

✓ VA6AM Engineering 20/15/10 low-power triplexer and band-pass filter measurements

DX Commander Classic 2 Vertical HF Antenna

Reviewed by John Leonardelli, VE3IPS
jleonardelli@arrl.net

When it comes to multiband vertical antennas for portable field operators, options are limited. The same goes for Field Day setups or extended park activations. What if you're heading to a vacation rental property and want an easy-to-deploy antenna to enjoy some HF radio time? Or maybe you're looking for a second antenna during contest weekends to quickly hop bands, and add multipliers, without needing a tuner. Could this be a good choice for Parks on the Air® (POTA®)?

The DX Commander Classic 2, designed by Callum McCormick, MØMCX, is a multiband vertical antenna that fits the bill for both portable and home use. A vertical has a small footprint and is easy to mount in a semi-permanent fashion. It covers HF from 40 through 2 meters (with optional support for 60/80 meters), using a fan-style array of ¼-wave and ⅝-wave vertical wire elements with spreader plates around a non-conductive fiberglass mast and a shared radial field.

Known for its efficiency and solid design, this modular kit-based antenna is lightweight (about 8 pounds) and somewhat portable, thanks to its 4-foot fiberglass mast sections.

The antenna is resonant on all supported HF bands, offering broad SWR bandwidth and a low takeoff angle ideal for DX. It includes a 32-foot (10-meter) telescopic mast, aircraft- and marine-grade components, and two spools of rugged DX10 wire (19 AWG, MIL-SPEC, PVC insulated).

Be mindful during setup — this 32-foot mast can easily come into contact with overhead wires or power lines. Safety first. Always assume and maintain a 35-foot safe operating radius.

Build Quality

The fiberglass mast is robust, made of spiral-wound epoxy-coated fiberglass with reinforced joints and a durable base plug. The kit includes laser-cut aluminum 5251 alloy plates, stainless-steel hardware, UV-resistant marine-grade Dyneema shock cord, and polyethylene spreader plates. The "Stay-Up" kit uses PA66 nylon with 8-millimeter hex nuts for mast reinforcement.



The included DX10 wire is excellent — flexible, durable, and cold-weather rated down to –40°F. I liked it so much I picked up an extra spool at Dayton Hamvention for future projects and to expand my radial field.

While I don't plan on using this antenna permanently, it's perfect for my portable and temporary setups. If you're considering a permanent installation, the DX Commander Discord community is a great place to get tips from others who've done it.

Bottom Line

If you're serious about HF fieldwork or contesting, or just want an efficient, resonant multiband vertical with broad coverage, the DX Commander Classic 2 HF antenna represents a good choice.

Kit Components

The DX Commander Classic 2 Plus 80 Meters comes as a kit. All materials and components are included and have been chosen for their high quality and ability to be used outdoors. Included in the package are a radiator base and radial plate, spreader plates, Stay-Up kit nylon straps, shock cord, spade connectors, coaxial feed-

point and waterproofing tape, a 10-meter fiberglass mast, two 328-foot (100-meter) rolls of DX10 wire, glue-infused heat-shrink tubing, and paracord for guying.

Assembly

Assembly is straightforward, thanks to Callum's excellent documentation and videos. Read the manual a few times, as it contains key information scattered throughout.

Basic tools are required, such as wire cutters or strippers, a tape measure, an 8-millimeter nut driver, and a crimping tool.

The build should take 3 – 5 hours. You'll cut and label the five vertical elements (for 40, 30, 20, 17, 12, and 10 meters), attach them to the mast with shock cord and spreader plates, and then tune each band. Don't forget the heat shrink for weatherproofing. I used bracelet beads to identify each radiating element, and stored each one in its own reclosable bag. Line winders aren't needed — I just roll each wire set neatly and tie off with a BongoTie.

Remember, cut the wires according to the chart as the foldbacks have all been included in the cut chart length. There is no need to add any extra wire, as it will just make the tuning process more laborious.

The 40-meter element is described in the Signature 9 (DX Commander telescoping masts) antenna section. The element goes through the top ferrule and doubles back onto itself.

I also needed some technical support, as the new mast has a metal cap and the instructions were unclear. Here's what you need to do: Unscrew the bottom cap, place the radial plate over the threads, and then screw the cap back on. After that, position the Herbie Clip (hose clamp) just above the metal collar to insulate the driven plate. Slide the driven plate on, and use a PA66 nylon strap to hold the driven plate in place. Use a pair of chairs to support the mast while attaching the elements.

If you choose to replace the 30-meter radiating element with a 60- or 80-meter element, note that it will affect the tuning of the other bands. You will have to decide which band element you wish to use when tuning the antenna. I also suggest a lighter wire (I plan to use #26 silky wire) to avoid the mast bending.

Callum recommends deploying at least 16 to 32 radials, each approximately 10 to 15 feet in length, to achieve maximum efficiency. I chose four sets of four radial bundles that are 10 feet in length. A higher quantity of shorter radials on the ground has been proven to offer better performance than several long ones. I will add a second set of radials, providing me with the option to have 32 radials. There is enough wire for eight sets of radials using 10 feet in length for a total of 320 feet.

After several deployments, I found that marking the guying triangle and preparing the guy ropes make the mast raising easier. Use the nylon Stay-Up clamps above each section joint to prevent the mast collapsing within itself in place of electrical tape for longer-term deployments. I found the bottom three or four mast sections will tend to collapse into the next section, so it's important to always clamp those.

If you are deploying the mast by yourself, the antenna will be top-heavy until you install all three guys at the lowest insulator plate. If you install only two guys, the antenna could kick out on you (especially in 15 mph winds; see the lead photo) until you connect the third guy. For a close view of the guying setup, see Figure 7.

Some Notes

Read the manual several times, and watch the videos for an easier build-out. Cut the radiating elements first, then use the remaining wire for radials to ensure you don't run short. More radials means better performance. The stopper knot diagram was unclear, so I watched an animation of the double overhand knot. I would have appreciated a small 8-millimeter nut driver included in the kit. The teardown takes longer than the setup time and is best not done in the dark.

There is a link to an SWR chart in the manual that simplifies the antenna tuning with cut measurements. I ended up with the following results at the start: 40 meters at 1:1, 30 meters at 1:8, 20 meters at 1:5, 17 meters at 2:0, 15 meters at 1:2, 12 meters at 2:8, 10 meters at 3:3, and 6 meters at 1:8. Afterward, I just needed some tweaking on some of the bands.

On-Air Performance

Once the initial assembly is done, the antenna still takes time to deploy — expect at least 30 minutes the first time — but it's a one-person job. Once set up, performance is as expected from a vertical. I had no problems making contacts, starting at 10 meters and working my way down band by band. Hunting for parks without a worry about the SWR was liberating.

A well-laid radial field enhances performance. I chose many short radials over fewer long ones, which aligns with *The ARRL Antenna Book* recommendations. For best results, lay radials in a spoke-like pattern on the ground.



Figure 7 — The DX Commander Classic 2 HF antenna base guyed.

To reduce common-mode current and enhance RF performance, use a ferrite choke or common-mode choke balun at the feed point (not included).

Table 8 — DX Commander Classic 2 HF Vertical Antenna

Manufacturer's Specifications (not tested in the ARRL Lab)	
Vertical antenna type:	Resonant multiband
Vertical antenna height:	32.81 feet
Antenna power rating:	1500 W SSB/CW — 400 W FT8/digital
Antenna feed-line connection type:	UHF female, SO-239
Weight:	8 pounds

I did some basic signal report tests and found it at times to be a 1 – 2 S-unit improvement over a balun-based end-fed half-wave antenna. Other times the antenna was comparable to an inverted **V** on 40 and 20 meters, depending on the calling station's location. I am satisfied with its performance and usability for my use cases. The DX Commander performs better, as it uses resonant antenna lengths, not a high-impedance wire requiring a balun to bring the impedance down to something close to 50 Ω.

Conclusion

The DX Commander Classic 2 is a superb antenna for both home and portable use. With thoughtful planning and a bit of build time, it rivals commercial verticals that cost much more. You'll be rewarded with excellent performance across multiple bands — no tuner required. Its high-quality components designed for outdoor usage will provide years of enjoyment.

Manufacturer: DX Commander, **https://dxcommander.com**. Price: Classic 2, $422; Classic 2 Plus 80 Meters (reviewed unit), $502. Available in the US from DX Engineering.

Strays

A Young Ham Investigates New and Vintage Radio Technology

On August 15, 2025, the Vintage Radio and Communications Museum of Connecticut (**www.vrcmct.org**) entertained George Ferron, KC1UYC, a 13-year-old Extra-class operator from Plainfield, Vermont, and his grandfather, Robert Beach, of Connecticut (not yet licensed). The pair checked out the museum's amateur station, W1VCM, to learn more about amateur radio and its history. George operated a new 6-meter HF transceiver, and his first contact from W1VCM was W1AW! Then, after learning about warm-up frequency drift and how to load and tune a vacuum tube transmitter, he tried the Heathkit HW-101, making a solid contact with a station in Florida. Fun for all!



George Ferron, KC1UYC, operates W1VCM's HW-101 at the Vintage Radio and Communications Museum of Connecticut. [Bill Cook, W1FMX, photo]